Ormandy Rycroft

Heating & Cooling Solutions

Vari-E-Plate

Operating & Maintenance Manual

VERY IMPORTANT - PLEASE READ CAREFULLY

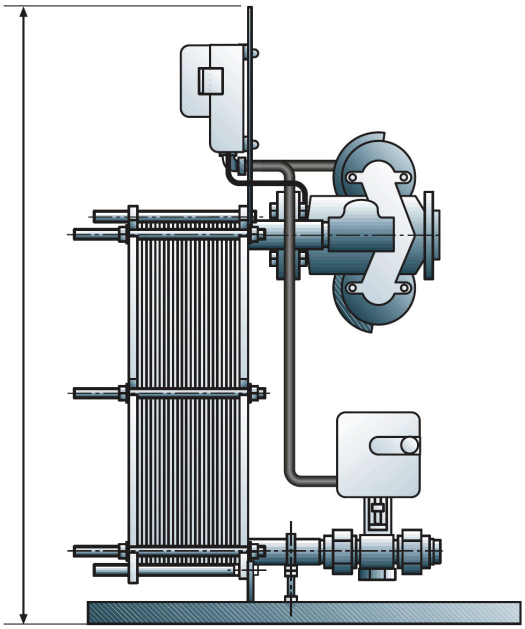

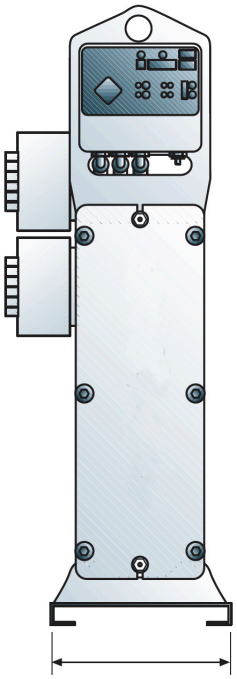

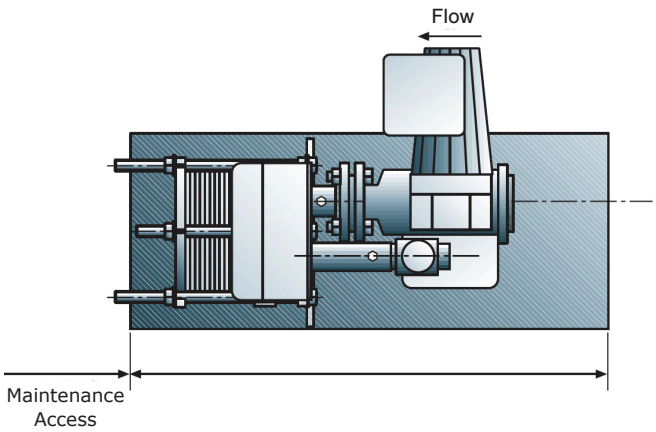

1. Running

1.1 Safety Points

- During operation, the unit may have very hot or cold surfaces.
- The temperature probe is installed directly in the secondary flow. Do not remove when the system is hot, full of water or under any pressure.
- Take care when lifting. Only use the designated lifting point. Use only certified lifting equipment capable of lifting the weight. Residual water may also be present and spillage could occur.
- Never lift the Ormandy Rycroft Vari-E-Plate by any associated pipework or pipe connections.
- Take care when handling, as some edges may be sharp.
- The equipment has danger from electricity. Do not remove covers or allow any exposed live parts. Isolate before working on the unit.
- The electrical and mechanical functionality must be considered prior to connecting any non factory fitted equipment. E.g. pumps, valves, actuators etc.
- Power supply and control signal cables **MUST** be segregated as far as is reasonably practical.
- Shielded control cables must be used.
- Local authority regulations must be followed at all times.
- Ensure all operations are carried out by suitably trained / qualified personnel.

1.2 Start Up

Checks	**Complete (✓)**
Check that electrical installation is complete.	
Check that the mechanical installation is complete.	
Check that the system has been flushed, but **NOT** through the plate pack and that there are no leaks.	
Check that any air has been eliminated from the system.	
Check that valves are opened in the required sequence.	

1.3 Working Principle

The unit comprises of a 2-port valve, variable speed primary pump (Single or Dual), a plate heat exchanger, secondary pump and a temperature sensor in the secondary flow. The two port valve opens and closes in line with the secondary demand. As the demand rises, the secondary temperature will start to fall, thus causing the two port valve to open and the variable speed pump to ramp up and deliver the increased demand of primary water.

This causes the secondary temperature to rise, closing the two way valve and slowing down the variable speed pump, thus reducing the primary flow. If there is no demand, the two way valve will close and the primary pump will stop, thus maximising energy savings. The Ormandy Rycroft Vari-E-Plate is used as either a stand-alone instantaneous water heater as shown below.

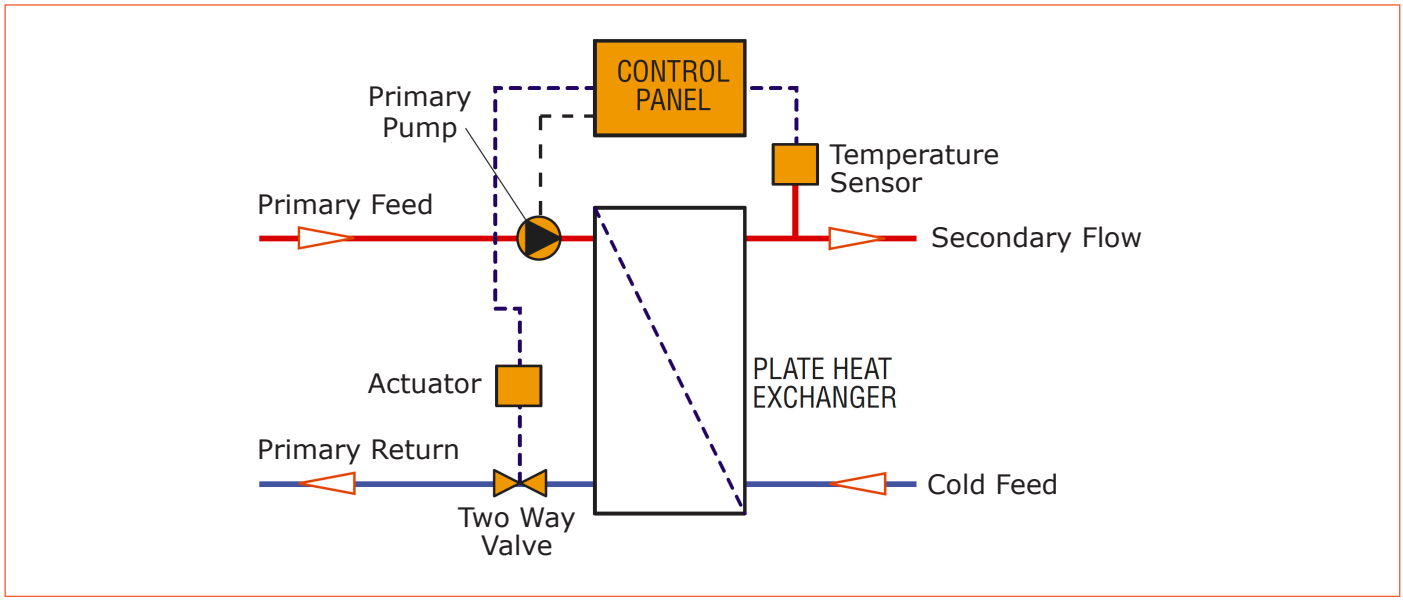

Or in conjunction with a buffer vessel to form a semi-instantaneous water heater.

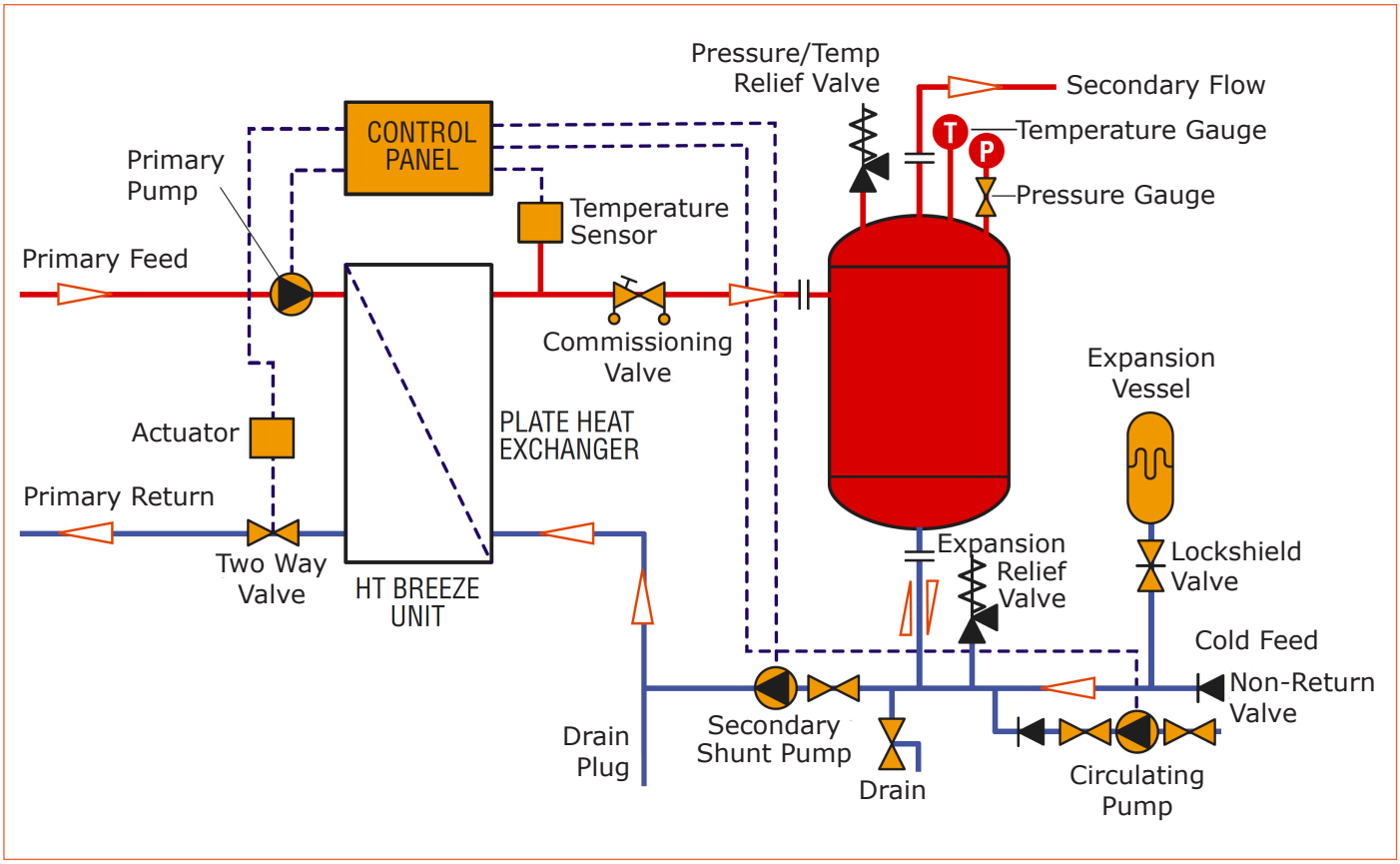

2. Installing

2.1 Sizing and Selection

To size a stand alone Vari-E-Plate, use the following demand factors.

Table 1

Facility	Private Hand Basin	Public Hand Basin	Shower	Bath	Slop Sink	Bar Sink	Kitchen Sink	Washing Machine	Lab Sink	Dish Washer
Hospital	1	2	4	4	4		10	10	3	10
Residential Hall & Hotel	1	2	4	4	4	12	10	10		10
School	0.5	3	10	-	3		10	3	3	10
Sports Centre /Barracks	0.5	2	10	-	3	12	10	-	-	10
Restaurant	0.5	4	-	-	12	12	19	-	-	10
University	0.5	3	10	-	3	-	10	-	3	10
Offices	0.5	3	3	-	3	-	10	-	3	10
Factory	0.5	3	4	-	3	-	10	-	3	10
Apartments	1	-	4	4	3	-	3	3	-	2

Sizing Considerations

Careful consideration must be given to the sizing of stand alone instantaneous water heaters. Standard demand units incorporate a degree of diversification that would be inappropriate for continuous use applications. A more desirable method of sizing for continuous applications is to complete a fixture count and allocate an appropriate flow for each fitting.

It should also be noted that shower demands for Schools, Sports Centres and Universities should only be used for medium to large installations. Refer to our design department for further information.

Example

From Table 1, a 173 bed Hospital ward with showers, hand basins and sinks.

42 single person showers	42 x 4	= 168
55 private hand basins	55 x 1	= 55
9 public hand basins	9 x 2	= 18
3 slop sinks	3 x 4	= 12
15 baths	15 x 4	= 60
Total Demand Units		**= 313**

The shower factors are based upon intermittent use.

Where certain activities may result in all showers operating together, please contact our sales department for advice.

The correctly sized Vari-E-Plate can now be selected from Table 2.

Table 2

HT Breeze Model	Maximum Demand Units	Max Continuous Duty @ 60°C (litres/sec)	Boiler Power (kw)	Min Secondary Volume (litres)
GBPH50	23	0.50	105	75
GBPH100	70	1.00	209	125
GBPH150	130	1.50	313	150
GBPH200	210	2.00	418	200
GBPH250	320	2.50	522	250
GBPH300	480	3.00	627	300
GBPH350	640	3.50	732	350
GBPH400	820	4.00	836	400

These sizes represent the standard range of Vari-E-Plate instantaneous water heaters. For larger requirements for both single and three phase, please contact our technical department. Both Standard and Special designs can be offered to suit your specific requirements.

To size a Vari-E-Plate and Buffer Vessel use the following maximum demand rates.

Table 3

Facility	Private Hand Basin	Public Hand Basin	Shower	Bath	Slop Sink	Bar Sink	Kitchen Sink	Washing Machine	Lab Sink	Dish Washer	Load Factor
Hospital	10	15	70	60	50		80	100	40	150	0.7
Residential Hall & Hotels	10	15	50	50	50	100	80	100		150	0.5
School	5	20	180		40		80	40	40	150	0.8
Sports Centre /Barracks	5	15	220		40	100	80			100	1
Restaurant	5	25			100	100	140			150	1
University	5	20	220		40		80		40	150	0.8
Offices	5	10	180		40		40		40	100	1
Factory	5	20	120		50		80		40	100	1
Apartments	5		50	50	40		20	40		20	0.7

Example

42 single person showers	42 x 70	= 2940
55 private hand basins	55 x 10	= 550
9 public hand basins	9 x 15	= 135
3 slop sinks	3 x 50	= 150
15 baths	15 x 60	= 900
Total Volume		**= 4675**
Load Factor from Table 3		**= 0.7**
Total Demand Rate	**4675 x 0.7**	**= 3273 litres/hr**

The Vari-E-Plate and Buffer Vessel combination, should be sized as follows:

The Buffer Vessel Capacity = 25% of the total hourly demand, therefore the required storage capacity = 3273 x 0.25 = 818 litres. The nearest standard Buffer Vessel sizes are 800 and 900 litres.
It is recommended to go up in size and therefore a 900 litre Buffer Vessel should be selected.

The Vari-E-plate can be selected as follows:

Continuous hourly demand = 3273 litres
Specific Heat Capacity of Water = 4.187 kj/kg,°C
Cold Feed Temperature = 10°C
Secondary Flow Temperature = 60°C

Therefore the required kw rating $= \frac{3273 \times 4.187 \times (60-10)}{3600}$ **= 190.3 kw**

The nearest standard Vari-E-Plate is a GBPH100 which is rated at 209 kw

A Vari-E-plate and Buffer Vessel combination is used when water demand is not constant but high flow frequently occurs. Boiler power requirements are reduced by storing hot water in the buffer vessel for peak demands.

The Vari-E-plate should always be installed with a secondary return line coming back from the system and into the cold feed line, prior to the Vari-E-plate or Buffer Vessel. This will remove nuisance high limit tripping, due to temperature overshoot, which would occur if the unit was installed on a 'dead end' system, when an outlet was closed. To ensure full heat dissipation, the secondary volume should not be less than that shown in Table 2.

For larger capacities contact the sales department for advice.

2.2 Installation

Foundation

The Ormandy Rycroft Vari-E-Plate should be mounted on prepared foundations that are level.

Lifting

One lifting hole is provided on the top of the Vari-E-Plate control panel. Avoid the use of chains, as screwed connections may be damaged by the links.

Caution: Never lift or move the Vari-E-Plate by its pipework or pipe connections.

Pipework

Make sure that the pipework flanges are square and correctly spaced before bolting up. Ensure that the weight of the pipework is taken by external supports and not by the Ormandy Rycroft Vari-E-Plate. Allowances should be made for expansion of the pipes either by suitable bends or flexible joints. Tighten flange bolts in a diametrically opposite sequence, not consecutively round each flange.

Connections

The threaded connection may be sealed with PTFE tape. Flanged connections should be sealed with a suitable gasket and sealing agent.

Liquid Expansion

Changes in volume with temperature must not be overlooked. The system pressure will rise dramatically if there is nowhere for water to expand. It is not advisable to use a relief valve as a means of releasing the excess water.

Vented systems use the atmospheric vent as an expansion pipe with discharge back into the tank. Unvented systems require a separate expansion tank.

Venting

Vent valves must be fitted at the highest point in the connecting pipework, so that the Ormandy Rycroft Vari-E-Plate can be bled of air for initial operation. It is **essential** that the flooded can type pump motors which are commonly used for all Ormandy Rycroft Vari-E-Plate pumps, are bled of air and flooded before starting. See the pump manufacturer's instructions.

Filling

Before filling the system check that the drain valve is closed and all air vents are open.

Flush out the system before installing the Ormandy Rycroft Vari-E-Plate, to remove any foreign matter. Close any manual air vents and run the Vari-E-Plate. Crack the vents to release air.

Caution: Do not fill the system too quickly, otherwise pockets of air may become trapped.

Do Not flush the system through the plate heat exchanger as this could result in the plates becoming blocked or cause a loss in performance.

2.3 Operation and Set Up

Key to Ormandy Rycroft Vari-E-Plate controls and indicators.

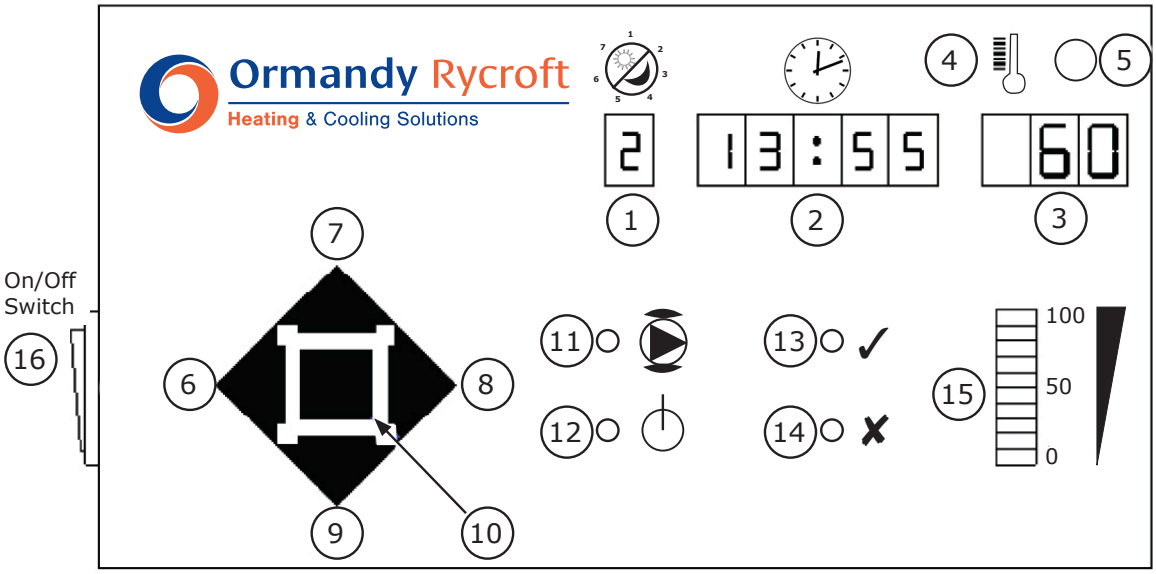

1	Day/Mode Display	7	Value Increase Push Button	13	System Healthy Indicator
2	Time/Alarm Display	8	Step Right Push Button	14	System Fault Indicator
3	Temperature/Parameter Display	9	Value Decrease Push Button	15	Valve Position Bar Display
4	High Temperature Alarm Indicator	10	Mode Select Push button	16	On/Off switch
5	Reset Push Button	11	Pump Energised Indicator		
6	Step Left Push Button	12	Power On Indicator		

Electrical Connections

Terminal Block

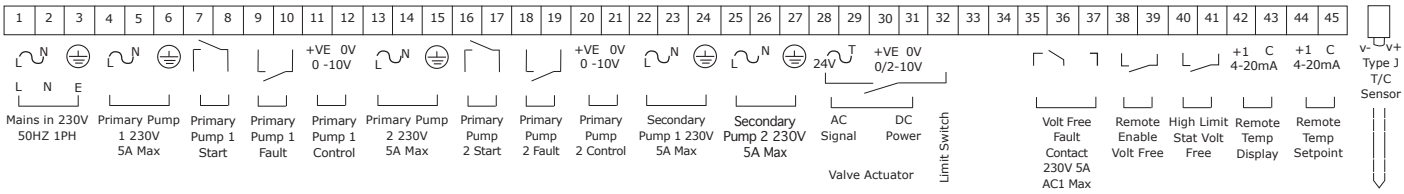

The Electrical connections are located in the terminal compartment. A description of the terminals can be found on the inside of the terminal compartment cover.

Connect a single phase 230V 50Hz supply to the Mains Input terminals. The rating plate will have all the information necessary to rate this supply.

If the unit is to be controlled remotely, connect the remote control switch or contacts to the Remote enable terminals. If the unit is to be controlled locally, fit a link between these terminals.

DO NOT apply voltage to these terminals!

Voltage free fault relay contacts are provided for Remote Fault Indication.

Operation

The Vari-E-Plate is a self-contained unit, which controls up to two primary and two secondary pumps, together with a two-port valve to provide hot water. When the system is fitted with two primary pumps, they are operated on a shared duty-standby cycle with automatic changeover on pump failure.

Switch on via switch (16)

The front panel will illuminate. After a few seconds of self checks, the displays will settle to the **Day** (1) (Time-clock only), **Time** (2) and **Temperature** (3). The pumps will start (11), the valve will open (15) and the system healthy indicator (13) will illuminate.

The standard temperature setting is 60°C and the unit will run continuously. (24 hour operation).

To change any of the default settings, refer to Figure 3

The Vari-E-Plate can be energised by its own internal time clock function, by a remote switch or Building Management System or by a combination of the two.

a) Remote Switch or Building Management System Control

The Vari-E-Plate will be turned on when contacts connected to the Remote Enable terminals are closed. This allows the user to control the time of day when hot water will be available.

When the contact is open the system is turned off.

b) Internal Time Clock Control

For this function to work, the Time clock function should be turned on (see Set Up) and the Remote Enable terminals should be linked.

Under Time clock control, the Vari-E-Plate will be turned on and off at preset times of the day. Up to two on and two off times can be programmed for each day of the week.

The system can be re-activated after it has automatically switched off by pressing the Value Increase (7) push button. Each press of this push button will add 30-minute increments to a total, which is shown in the Time/Alarm window. Pressing the Value Decrease (9) push button will subtract 30-minute increments from the total time.

The time value counts down and when the time shown has elapsed, the unit will revert to normal time clock operation.

c) Remote Switch and Internal Time Clock Control

For this function to work, the Time clock function should be turned on (see Set Up) and a remote Control switch should be connected to the Remote Enable terminals.

Under Time clock control, the Vari-E-plate will be automatically turned on and off at preset times of the day. Up to two on and two off times can be programmed for each day of the week. When contacts connected to the Remote Enable terminals are opened the Vari-E-Plate will be turned off.

When remotely enabled and the system has turned off under time clock control, it can be re-activated by pressing the Value Increase (7) push button. Each press of this push button will add 30-minute increments to a total, which is shown in the Time/Alarm window. Pressing the Value Decrease (9) push button will subtract 30-minute increments from the total time.

The time value counts down and when the time shown has elapsed, the unit will switch off and revert to normal time clock operation. However, when the system has been turned off under remote control, it cannot be re-activated by pressing the Value Increase (7) push button.

Set Up

The Vari-E-Plate control unit is factory programmed with temperature and control settings that will suit most applications. However, we would recommend that the unit is commissioned to ensure correct operation and maximum efficiency. Contact our Service Department for details.
All the values are adjustable so that you can customise the unit to exactly match your system.

The set up routine is entered by pressing and holding the Mode (10) push button for three seconds. Press the Step Right (8) and Step left (6) push buttons to move forwards and backwards through the sequence. Press the Value Increase (7) or Value Decrease (9) push buttons to alter the value shown in the display. Press and hold the Mode (10) push button for 3 seconds to exit the set up routine.

Figure 1 - Set Up Sequence

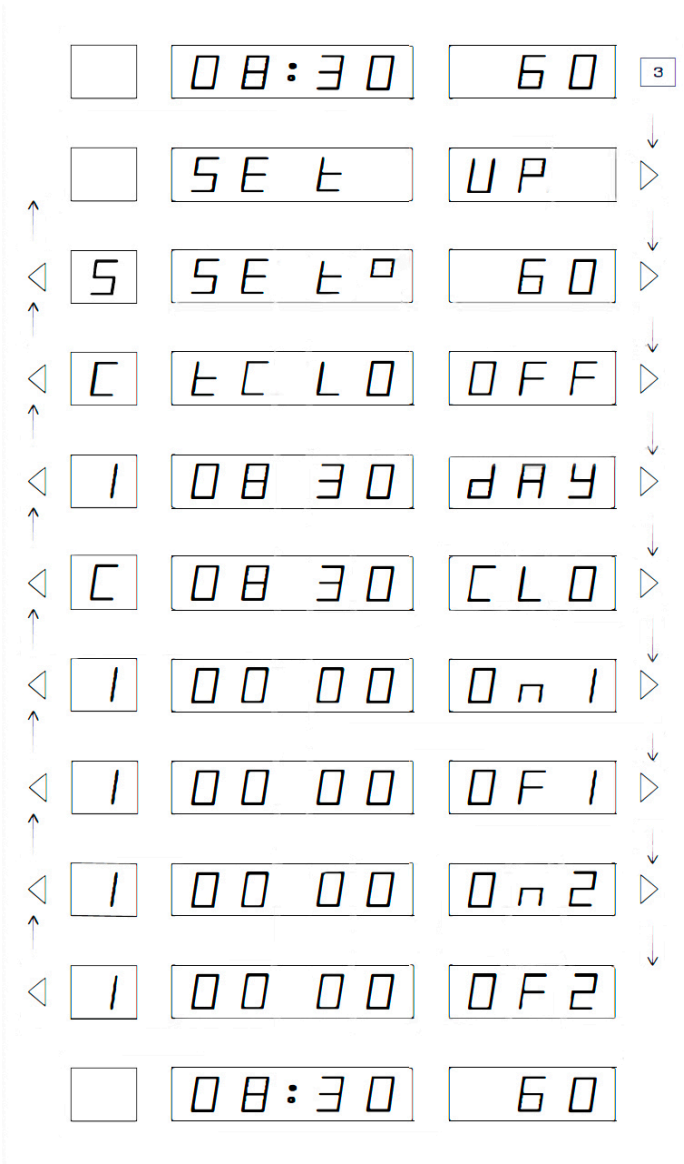

Press and hold for a minimum of 3 seconds to enter Set Up routine.

Press Step Right to move to first value.

Press Value Increase or Value Decrease push buttons to alter water temperature.

Press Value Increase to turn Time clock function on or off.

Press Value Increase or Value Decrease to change Day number.

Press Value Increase or Value Decrease push buttons to change time. Press and hold push button for rapid change.

Press Value Increase or Value Decrease push buttons to change the time of the first timed on and off period. Press and hold push button for rapid change.

Press Value Increase or Value Decrease push buttons to change the time of the second timed on and off period. Press and hold push button for rapid change.
Press Step Right push button to set the on-off times for day 2, day 3, day 4 etc.

Press and hold Value Select push button for a minimum of 3 seconds to exit Set Up routine.

The system continues to control when the controller is in the set up routine, allowing adjustments to be made on the fly.

System Faults

When a fault situation is detected, the System Fault (14) indicator will be lit and the internal Fault relay will be energised. The normal time and temperature display will be replaced by an alarm message.

The messages and meanings are shown in Figure 2 below. If a system fault occurs when the controller is in the set up routine the System Fault (14) indicator will be lit but the display will not be replaced by an alarm message. The alarm message can be viewed by leaving the Set Up routine.

Figure 2 - Alarm Messages

A	HL 1	77	First High temperature level detected.
A	HL 2	83	Second High temperature level detected - buzzer sounds and the system is automatically shut down.
A	LL	47	Low temperature detected.
A	PP 1F	60	Primary Pump No 1 failure - if two primary pumps are fitted Primary Pump No 2 will be energised.
A	PP 2F	60	Primary Pump No 2 failure - Primary Pump No 1 will be energised.
A	SP 1F	60	Secondary Pump No 1 (shunt) failure - system is automatically shut down.
A	SP 2F	60	Secondary Pump No 2 (re-circulation) failure -system is automatically shut down.
A	tCF	---	Thermo-couple failure - the system is automatically shut down.
A	rd	60	System has been remotely disabled

The Second High temperature level alarm will automatically shut the system down and sound a warning buzzer. The buzzer can be silenced by pressing the Reset (5) push button. When the fault has been diagnosed and corrected, the system can be re-activated by pressing the Reset (5) push button again. This can only be performed when the temperatures have returned to near normal. All the other alarms will automatically reset when the problem has been corrected. Alarms constantly re-occurring, could indicate that the system has been incorrectly configured.

Advanced Set Up Routine

The system is supplied with default settings, which suit most applications. The advanced set up feature allows Installers and Engineers to tailor the settings to suit particular installations. The system continues to control, when the controller is in the advanced set up routine, so results of adjustments can be seen immediately. In addition manual control of the valve position is available.

Set up routine is entered by simultaneously pressing and holding the Mode (10), Step Left (6) and Value Decrease (9), Push buttons for a minimum of 3 seconds. Press the Step Right (8) and Step Left (6) push buttons to move forwards and backwards through the sequence. Press the Value Increase (7) or Value Decrease (9) push buttons to alter the value shown in the display. Press and hold the Mode (10) push button for a minimum of 3 seconds to exit the set up routine.

Figure 3 - Advanced Set Up

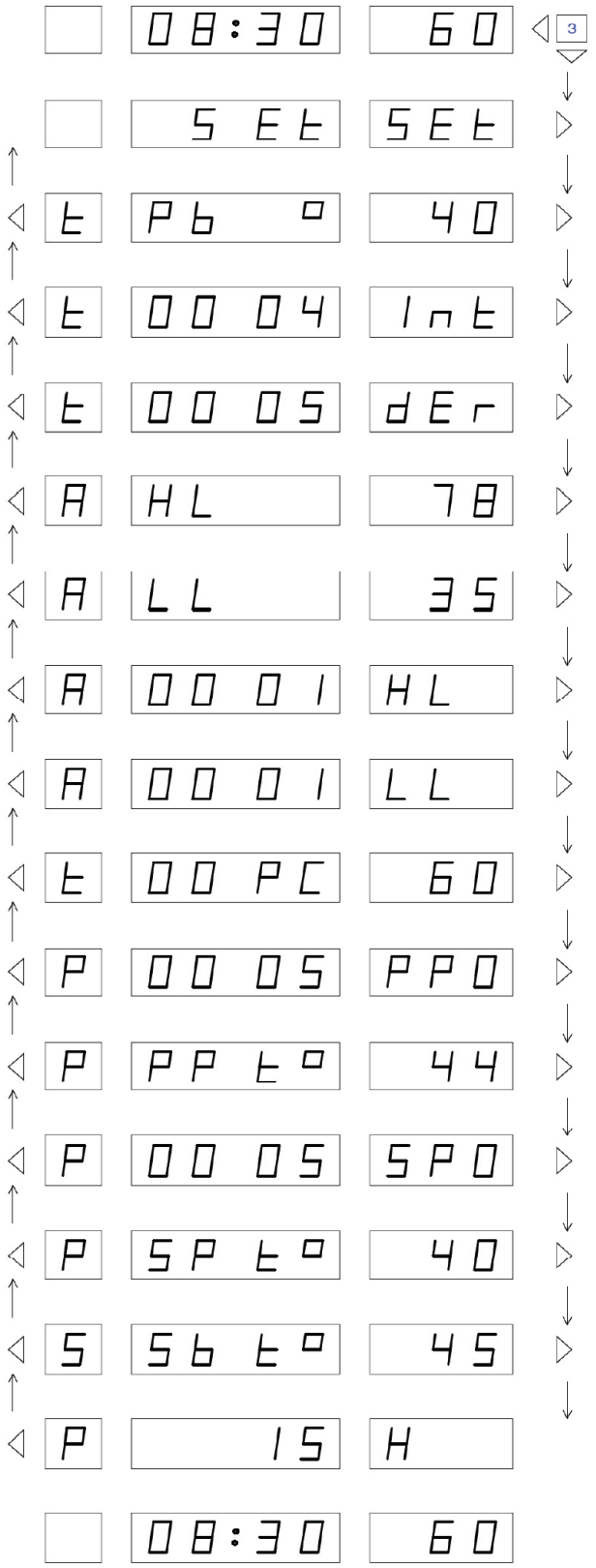

Press and hold for a minimum of 3 seconds to enter Advanced Set Up routine.

Press Step Right push button to move to the first setting value.

Press Value Increase or Value Decrease push buttons to alter Proportional Band.

Press Value Increase or Value Decrease push buttons to alter Integral Time.

Press Value Increase or Value Decrease push buttons to alter Derivative time.

Press Value Increase or Value Decrease push buttons to alter First level High temperature limit.

Press Value Increase or Value Decrease push buttons to alter Low Temperature Limit.

Press Value Increase or Value Decrease push buttons to alter High Temperature Limit Time Delay.

Press Value Increase or Value Decrease push buttons to alter Lower Temperature Limit Time Delay.

Press Value Increase or Value Decrease push buttons to vary valve position. Figure shows percentage open. See Manual Control.

Press Value Increase or Value Decrease push buttons to alter Primary Pump over-run time.

Press Value Increase or Value Decrease push buttons to alter Primary Pump over-run temperature.

Press Value Increase or Value Decrease push buttons to alter Secondary Pump over-run time.

Press Value Increase or Value Decrease push buttons to alter Secondary Pump over-run temperature.

Press Value Increase or Value Decrease push buttons to alter the Night Set-back/Pasteurisation temperature.

Press Value Increase or Value Decrease push buttons to alter Primary Pump duty - standby time.

Press and hold Mode push button for a minimum of 3 seconds to exit Set Up routine.

Night Set Back / Pasteurisation

When the DIP switch (5) for Night set-back/Pasteurisation is set to the on position and the unit is put into standby via the time-clock. When the pasteurisation temperature is set to above the normal set temperature, the controller will assume pasteurisation and will raise the temperature to the pasteurisation value for one hour, before returning to standby.

Alternatively when the set back/pasteurisation value is set to below the normal set value, the controller will assume set back and will lower the temperature to this value until the next scheduled on period.

Manual Control

The Advanced Set Up routine allows the engineer to position the control valve manually. This feature is active while this set up window is visible. This feature is disabled and control restored to automatic by pressing the Step Left (6), or Step Right (8) push buttons to display another parameter, or pressing and holding the Mode (10), push button to exit the advanced set up routine.
(See page 6 for key to number references).

Remote Set Point Adjustment

When a 4 - 20mA signal is connected to the remote input, the set point can be varied between 20 deg C = 4mA and l00 deg c = 20mA at the rate of 5 degrees per milliamp.

It should be noted that the external control signal assumes control as soon as the milliamp level rises above 2mA. Consequently if the controller loses this signal, it will revert back to it's own internal set point.

DIP Switch Settings

The physical configuration of the system and the Night Set-back / pasteurisation functions are programmed into the controller by setting the position of eight switches. The switches are located on the display printed circuit board. To change the position of these switches:

1) Isolate the mains supply to the controller.
2) Open the hinged door.
3) Remove the four fixing screws and slide the control facia out of the enclosure taking care not to pull the connecting cable.
4) Turn the facia over. DIP switches are located on the bottom edge of the circuit board.
5) Change the switch positions as required (see table below)
6) Replace facia, close hinged door and switch on the mains supply.

The following table shows the switch controls. (**Bold** positions are factory default values).

1	2	3	4	5	6	7	8	Function
On								No Operation
Off								No Operation
	On							No Operation
	Off							No Operation
		On						Fault Relay Operates During Remote Disable
		Off						Fault Relay, No Operation During Remote Disable
			On					Valve Output 2-10V
			Off					Valve Output 0-10V
				Off				Night Setback OFF
				On				Night Setback ON
					Off	Off		No Secondary Pumps Fitted
					Off	**On**		1 Secondary Pump Fitted (SHUNT)
					On	Off		1 Secondary Pump Fitted (RECIRC)
							Off	1 Primary Pump Fitted
							On	2 Primary Pumps Fitted

Factory Default Settings ☐

Set Up:

Alternative setting record (Date)		.....	.....	.....
Set Point	= 60	.....	.....	.....
Time Clock	= Off	.....	.....	.....
Day (Set)	= 1 = Mon 7 = Sunday			
Clock (Set)	= Time			
Day 1 ON 1	= 0000	.....	.....	.....
Day 1 OFF 1	= 0000	.....	.....	.....
Day 1 ON 2	= 0000	.....	.....	.....
Day 1 OFF 2	= 0000	.....	.....	.....
Day 2 ON 1	= 0000	.....	.....	.....
Day 2 OFF 1	= 0000	.....	.....	.....
Day 2 ON 2	= 0000	.....	.....	.....
Day 2 OFF 2	= 0000	.....	.....	.....
Day 3 ON 1	= 0000	.....	.....	.....
Day 3 OFF 1	= 0000	.....	.....	.....
Day 3 ON 2	= 0000	.....	.....	.....
Day 3 OFF 2	= 0000	.....	.....	.....
Day 4 ON 1	= 0000	.....	.....	.....
Day 4 OFF 1	= 0000	.....	.....	.....
Day 4 ON 2	= 0000	.....	.....	.....
Day 4 OFF 2	= 0000	.....	.....	.....
Day 5 ON 1	= 0000	.....	.....	.....
Day 5 OFF 1	= 0000	.....	.....	.....
Day 5 ON 2	= 0000	.....	.....	.....
Day 5 OFF 2	= 0000	.....	.....	.....
Day 6 ON 1	= 0000	.....	.....	.....
Day 6 OFF 1	= 0000	.....	.....	.....
Day 6 ON 2	= 0000	.....	.....	.....
Day 6 OFF 2	= 0000	.....	.....	.....
Day 7 ON 1	= 0000	.....	.....	.....
Day 7 OFF 1	= 0000	.....	.....	.....
Day 7 ON 2	= 0000	.....	.....	.....
Day 7 OFF 2	= 0000	.....	.....	.....

◁ ☐ ▽ **Set Set:**

		Alternative setting record (Date)		
		.....	.....	.....
Proportional Band	= 60%	.....	.....	.....
Integral Time	= 4 mins	.....	.....	.....
Derivative Time	= Off	.....	.....	.....
High Limit	= 78°C	.....	.....	.....
Low Temperature Warning	= 35°C	.....	.....	.....
High Temperature Limit Time Delay	= 1 min	.....	.....	.....
Low Temperature Limit Time Delay	= 1 min	.....	.....	.....
Manual Valve Operation	= 00%		(Not presetting)	

Primary Pump Overrun Time	= 5 mins	.....	.....	.....
Primary Pump Overrun Temperature	= 40°C	.....	.....	.....
Secondary Pump Overrun Time	= 5 mins	.....	.....	.....
Secondary Pump Overrun Temperature	= 40°C	.....	.....	.....
Night Set-back/Pasteurisation Temperature	= 68°C	.....	.....	.....
Primary Pump Duty Changeover Time	= 9 hrs	.....	.....	.....

By pressing the reset (5) and mode (10) buttons simultaneously for a few seconds, the time clock settings will be returned to the factory default settings.

By pressing the reset (5) and decrease (9) buttons, the control and alarm parameters will be returned to the factory default settings.

3. Health

3.1 Maintenance

Where possible, a detailed inspection of the Vari-E-Plate should be made after the first six months. This will provide an insight into future requirements for efficient maintenance. If the Vari-E-plate is cleaned and there is no sign of corrosion, it can be safely assumed an annual inspection will be sufficient for future servicing. All electrical connections should be checked and tightened if necessary.

Caution:- Maintenance should only be performed by qualified personnel only. Electrical work should be carried out by a qualified electrician in strict conformance to the latest requirements.

In order to maintain the Vari-E-Plate unit you will require as a minimum the following tool kit:

- Set of Metric allen Keys up to M16
- Set of Metric spanners
- Set of Screwdrivers
- A pipe wrench to suit a maximum 50mm nominal pipe size.
- M16 friction ratchet and M16 deep ring spanner (GBPH25 to GBPH250)

Controller

The controller is run via an EPROM that stores all the changes to the time programmes and other data. After the first six months, all connections in the panel should be checked and tightened if necessary.

Temperature Thermocouple

Ensure that the Thermocouple connections are satisfactory. Refer to the manufacturer's instructions.

Control Valve and Actuator

Check that the valve will open and close by using the manual facility on the controller. Electrical connection should be checked at the actuator. The linkage should also be tightened to ensure good mechanical contact. Refer to the manufacturer's instructions.

Hi-Limit / Control Valve and Actuator

In addition to the above, check that the valve opens and closes by turning the power on and off. Electrical connection should be checked at the actuator. The linkage should also be tightened to ensure good mechanical contact. Refer to the manufacturer's instructions.

Primary Pump

Ensure that the pump is on the correct speed setting and that wiring is secure at all terminals.

Plate Heat Exchanger

A series of contoured plates with ports form a plate pack with flow channels. The hot water flows down alternate channels, while the cold water flows up alternate channels. This creates 100% counter flow.

3.2 Service

Ormandy Rycroft Engineering offers a full and comprehensive range of service and support. This encompasses the maintenance, commissioning and repair of general water heating equipment, including heat exchangers, boilers, pressurisation units, booster sets and calorifiers.

Contact our Sales Department - sales@ormandygroup.com

3.3 Spares

All Vari-E-Plate component parts are available as replacement/spare items. Please quote as much information as possible to allow the supply of the correct part(s). Serial number, photos etc.

Contact our Spares Department - spares@ormandygroup.com

4. Information

4.1 Specification

Power Supply Requirements

Voltage: 230 Volts, 50Hz.
Nominal current: Maximum 16Amps (Pump and Duty dependant).

Inputs

Temperature probe: Type J thermocouple (Grounded) via a 12 bit A/D converter (minimum 0.1 °C resolution). Display range: 0 - 250°C

Volt Free Contacts

To enable from remote source (Time-clock, SCADA,BMS, boiler controls etc)
For connection of a supplementary high limit contact or thermostat as a second alarm.
Primary Pump(s) fault contact/s.

Signal

Remote set point adjustment. 4-20mA Scaled 20°C - 100°C.

Outputs

Pump Supply

- Two primary pumps (1 Duty, 1 Standby) single phase 230v 5A Maximum.
- Two secondary pumps (1 circulation, 1 shunt) single phase 230v 5A Maximum.

Valve actuator supply

- 24 v.a.c 20 VA Max
- Control signal 2 - 10v / 0 - 10.d.c 0.1mA, Max.
- The effective control setting range 0 - 85°C.

Volt Free Contacts

Changeover fault contact for remote alarm on fault, to SCADA, BMS, Annunciator etc.

Signal

Remote indication of process variable. 4 - 20mA scaled 0° - 100°C.

***NOTE: The volt free contact terminals must not have voltage applied to them.**

Ormandy Rycroft

Heating & Cooling Solutions

Duncombe Road,
Bradford, England BD8 9TB.

Telephone: +44 (0) 1274 490911. Email: sales@ormandygroup.com

www.ormandygroup.com